Ball Head Hexagonal Wrenches for hexagon socket screws, 8,0 mm

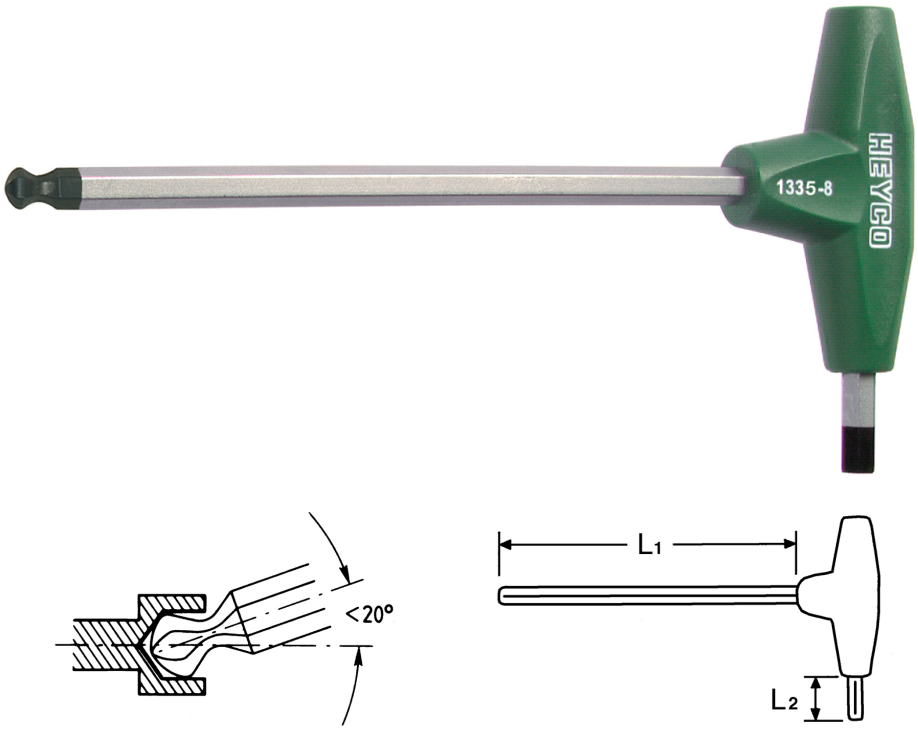

Chrome-Vanadium, C = chromium plated (with black tip) with shockproof plastic handle, spherical head permits usage on hexagon socket, screws located in confined or hard to reach areas off-axis operation up to 20°

Details	
Code-No.	01335008080
6Kt inside mm	8,0
L1 mm	175
L2 mm	25
Weight	150
Packaging unit	10
EAN	4024089113129

© HEYCO Qualitätswerkzeuge GmbH & Co. KG
Birgden III/1
42855 Remscheid

Details	
Packaging	cardboard

© HEYCO Qualitätswerkzeuge GmbH & Co. KG
Birgden III/1
42855 Remscheid